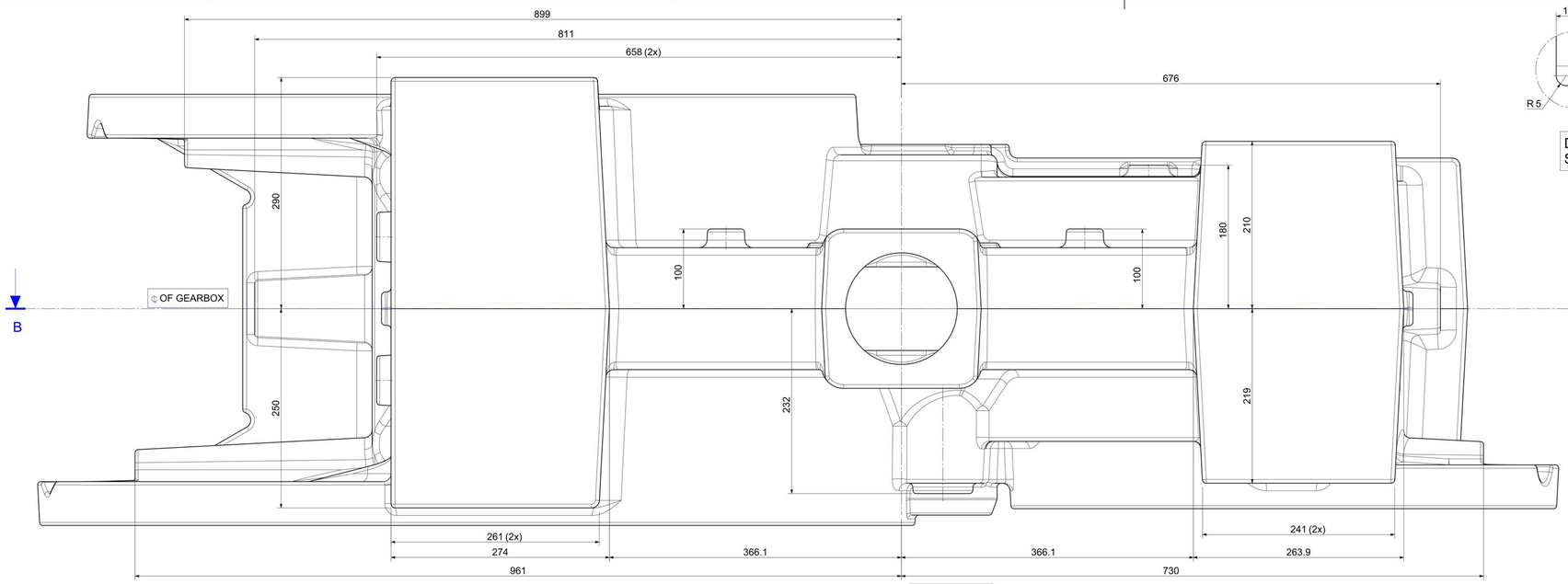

Bottom view

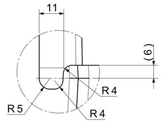

Detail E (2x)
Scale: 1:1

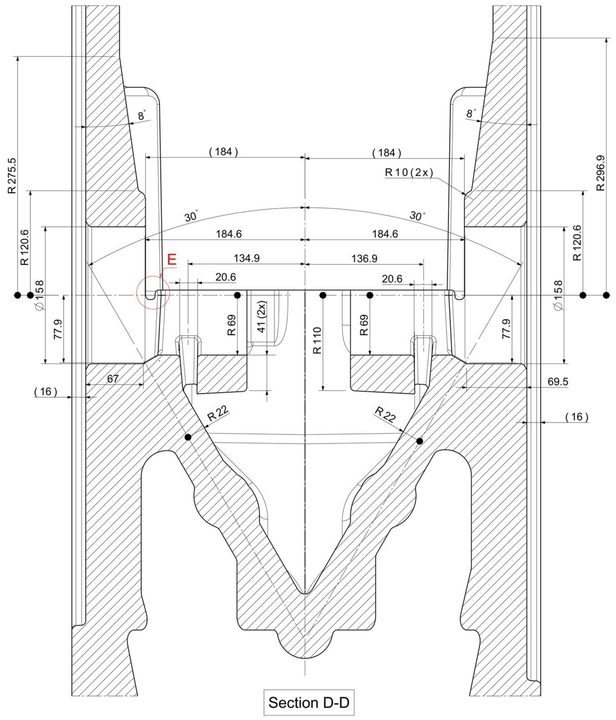

Section D-D

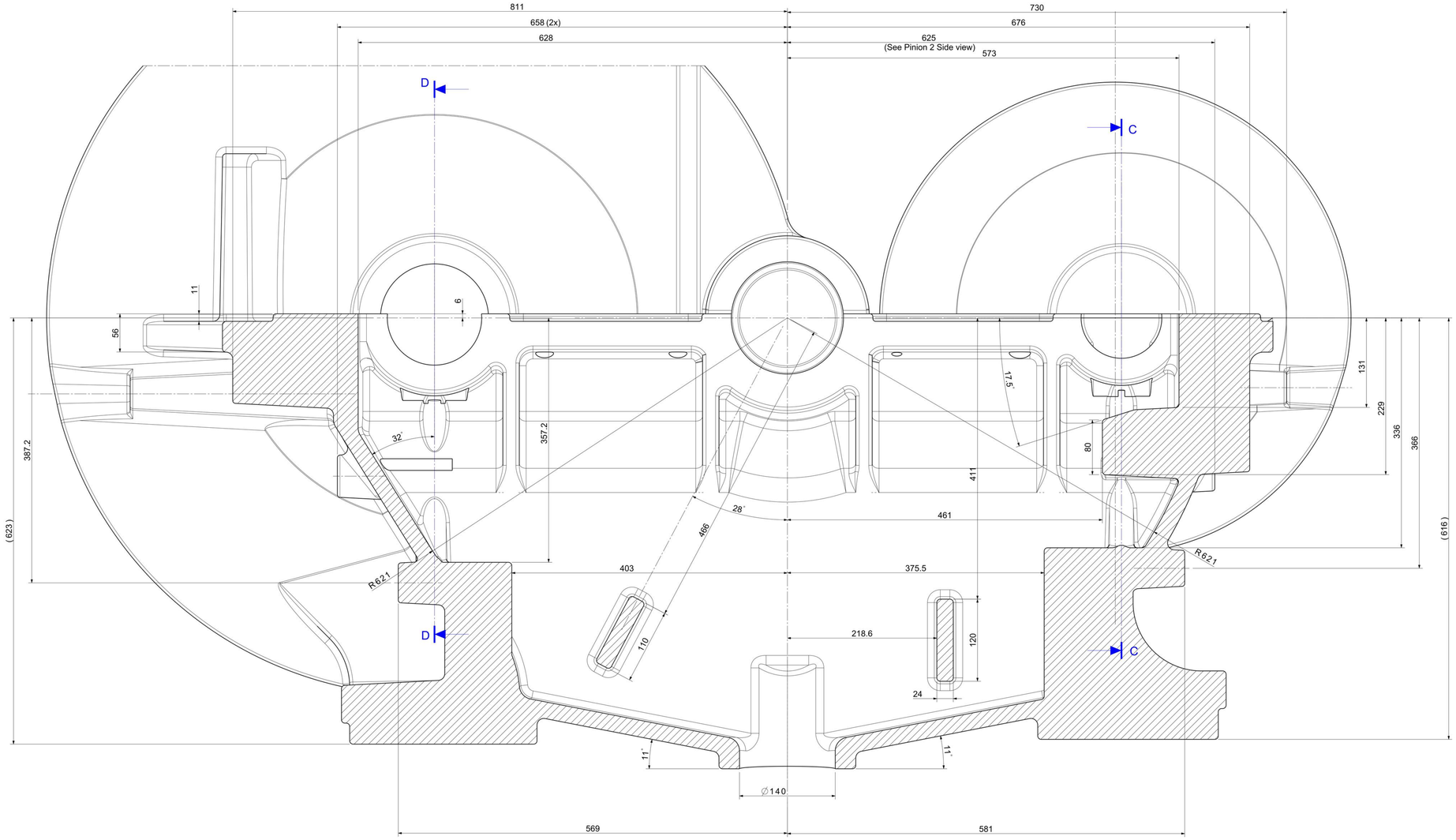

SectionB-B

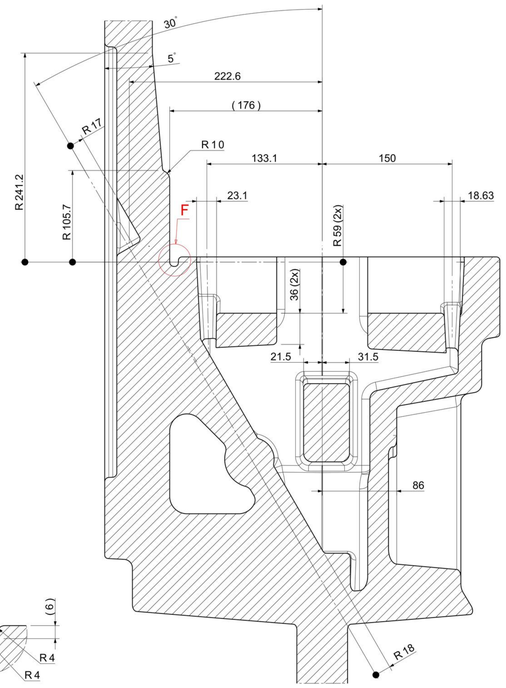

Section C-C

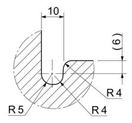

Detail F
Scale: 1:1

Rev.	Position	Modified from	Date	Modified by
1	.	.	6/8/2016	INESUB

All materials supplied are in compliance with the requirements of the List of Prohibited Substances.
This drawing is the property of INESUB and should not be copied or reproduced in any form or given to others, directly, indirectly or manufacturing or demanded to any other person or company.