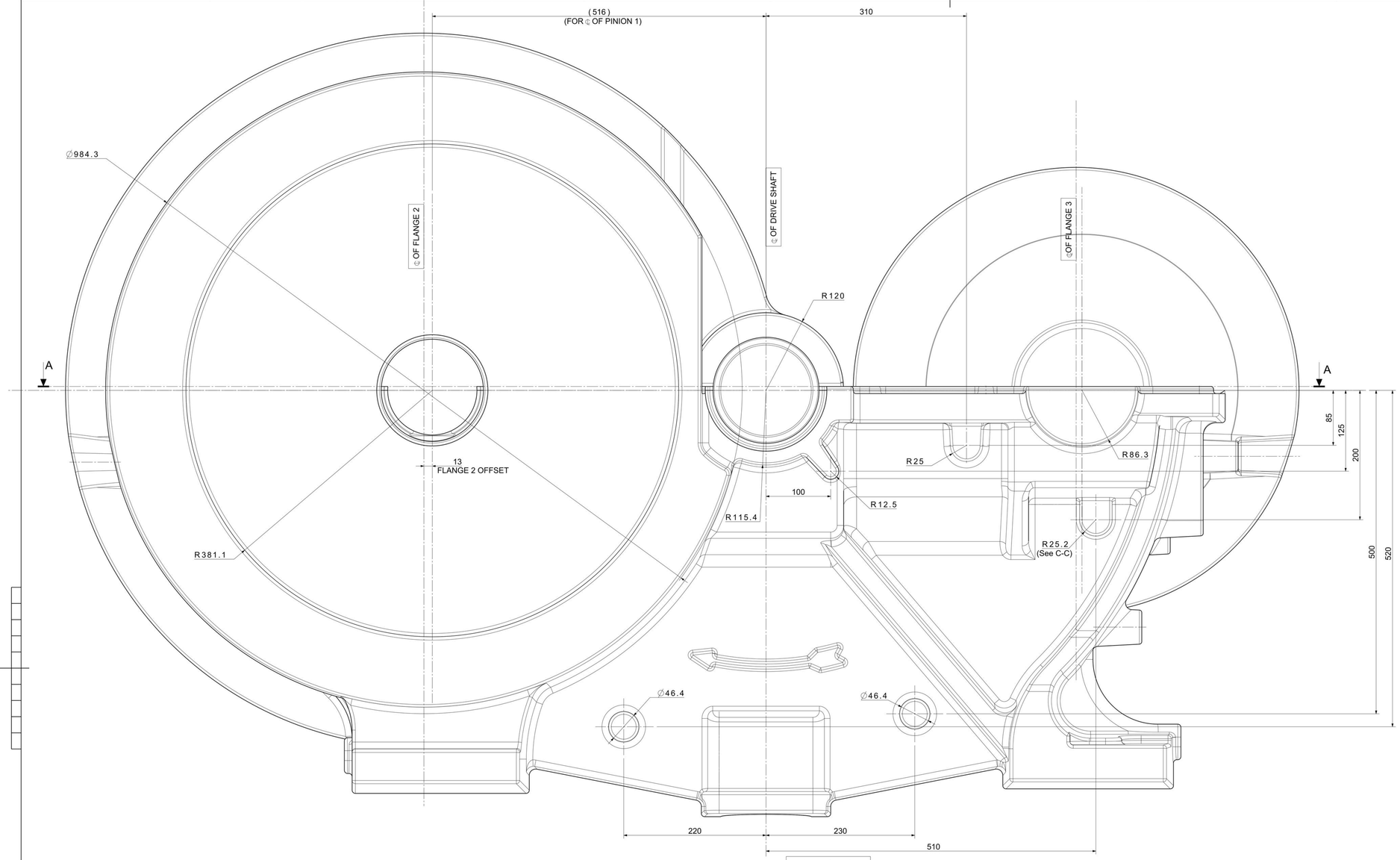

Drive side View

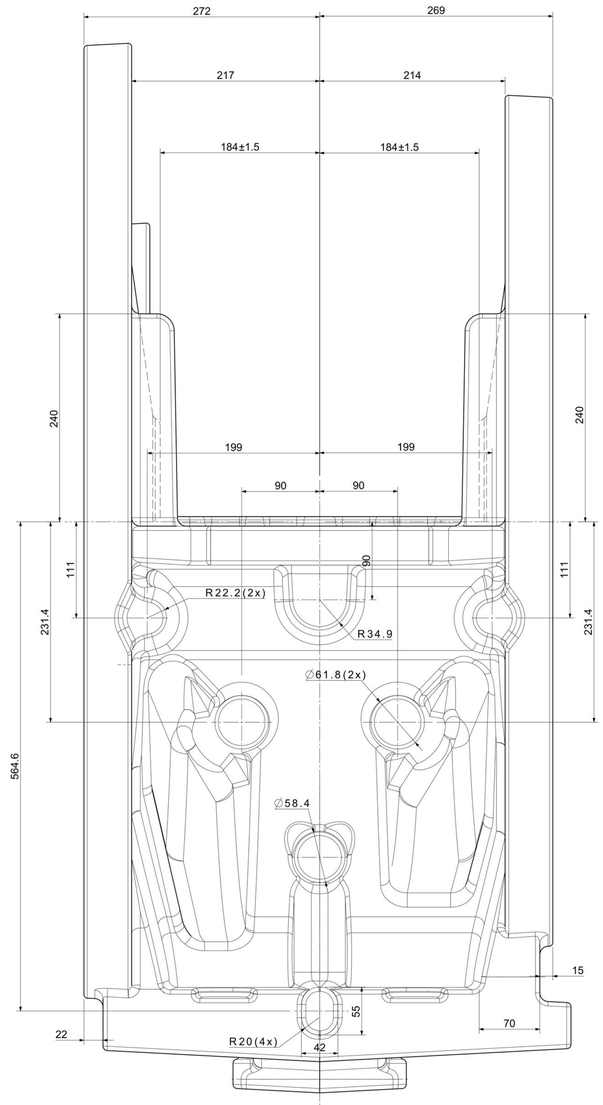

Pinion 1
side View

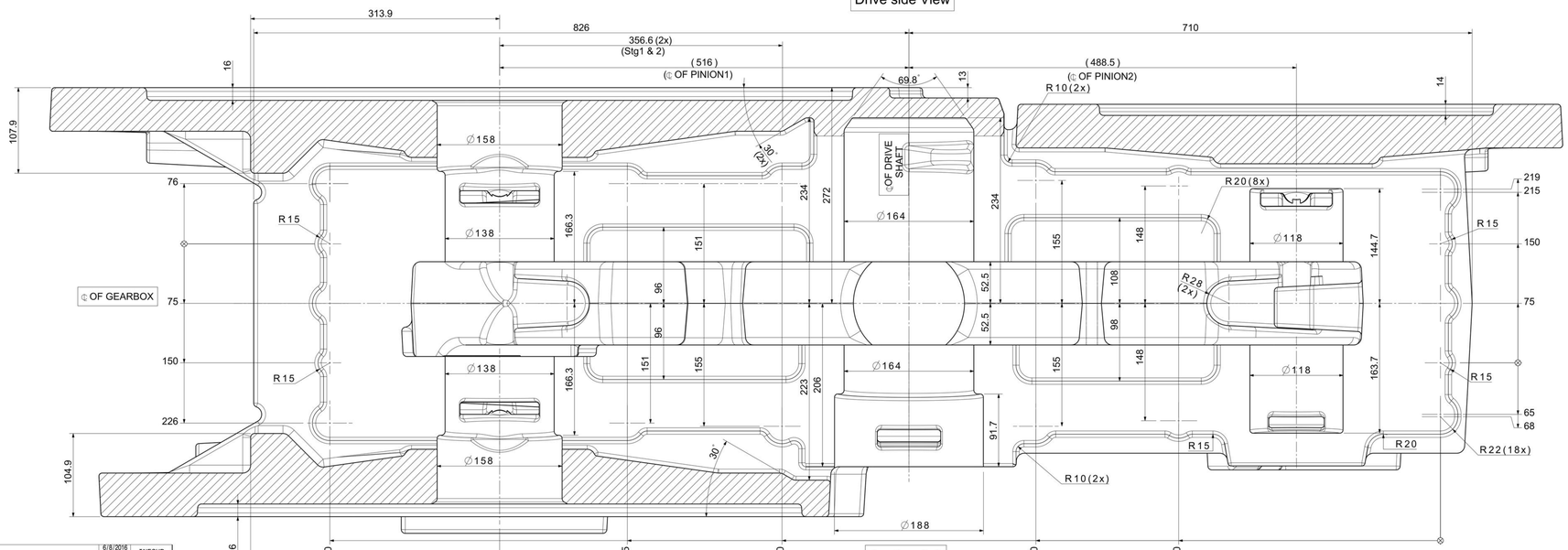

Section A-A

NOTES:

1.CASTING TO BE STRESS RELIEVED AS FOLLOWS:
- -HEAT CASTINGS TO 510-530 ºC AT A RATE NOT TO EXCEED 100 ºC/HOUR
- -HOLD FOR 1 HOUR
- -FURNACE COOL TO 300 ºC AT A RATE MAX. 60ºC/HOUR
- -AIR COOL IN STILL AIR

ALTERNATIVE:
- -COOL DOWN IN MOULD FOR 24 HOURS UNTIL TEMPERATURE IS LESS THAN 300° C
- -AIR COOL IN STILL AIR

2.ALL TIE BARS AND CAST SUPPORTS USED IN CREATING CASTING TO BE REMOVED BY FOUNDRY

技术要求：
1.材质为：EN-GJS-400-18
2.铸造公差等级11级
3.需要做压力测试，压强1.5Mpa
4.加工后不能有外露缺陷

Rev.	Position	Modified from	Date	Modified by
1	-	-	6/8/2016 1:04:10 PM	INESUB

All materials supplied are in compliance with the requirements of the List of Prohibited Substances.
Technical data, specifications, illustrations and descriptions herein are believed to be correct but are subject to change without notice, and are not warranting or guaranteed to be error proof or complete.
Copyright © 2016 Bonfiglioli Vectron