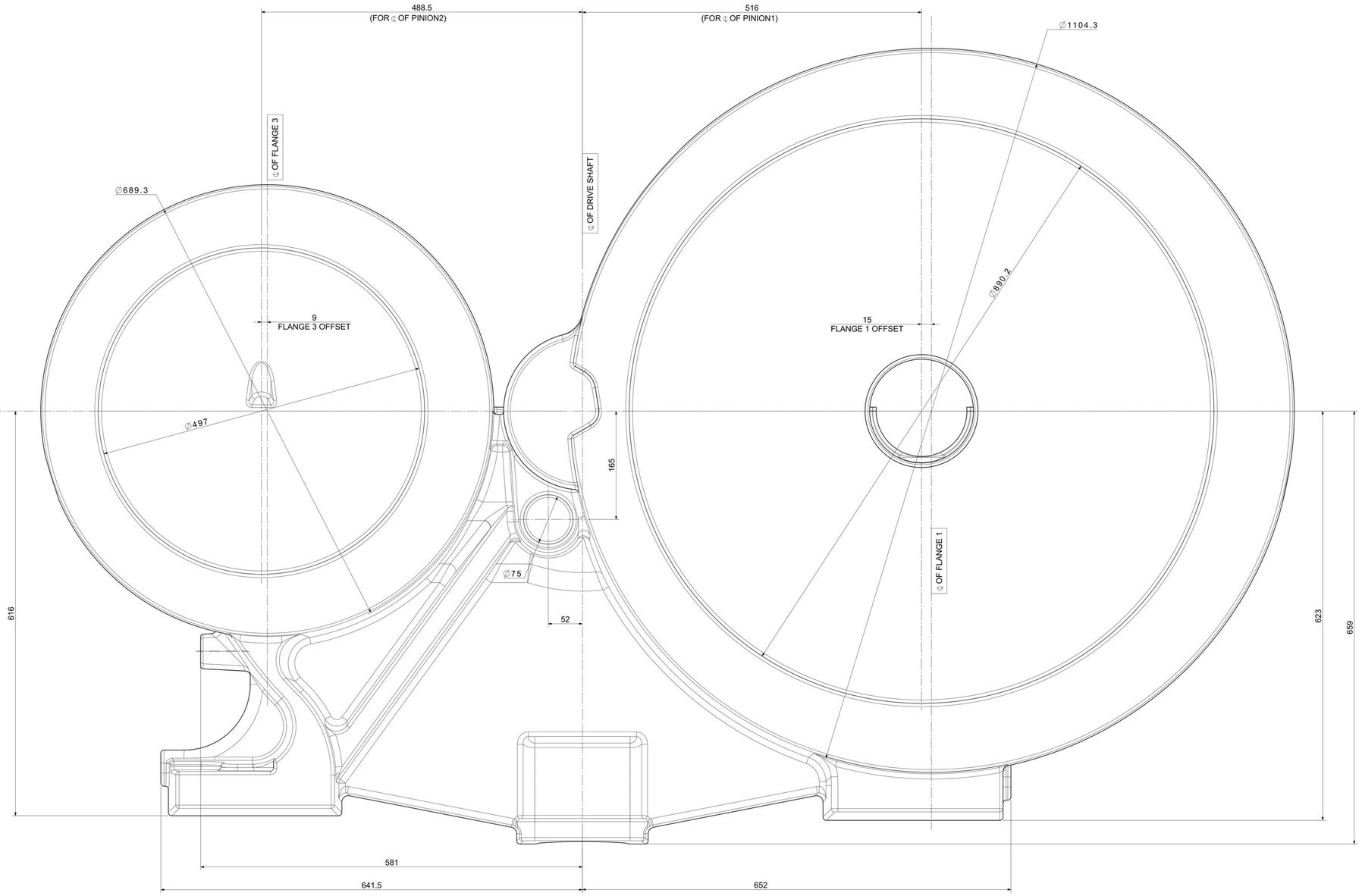

Pump Side view

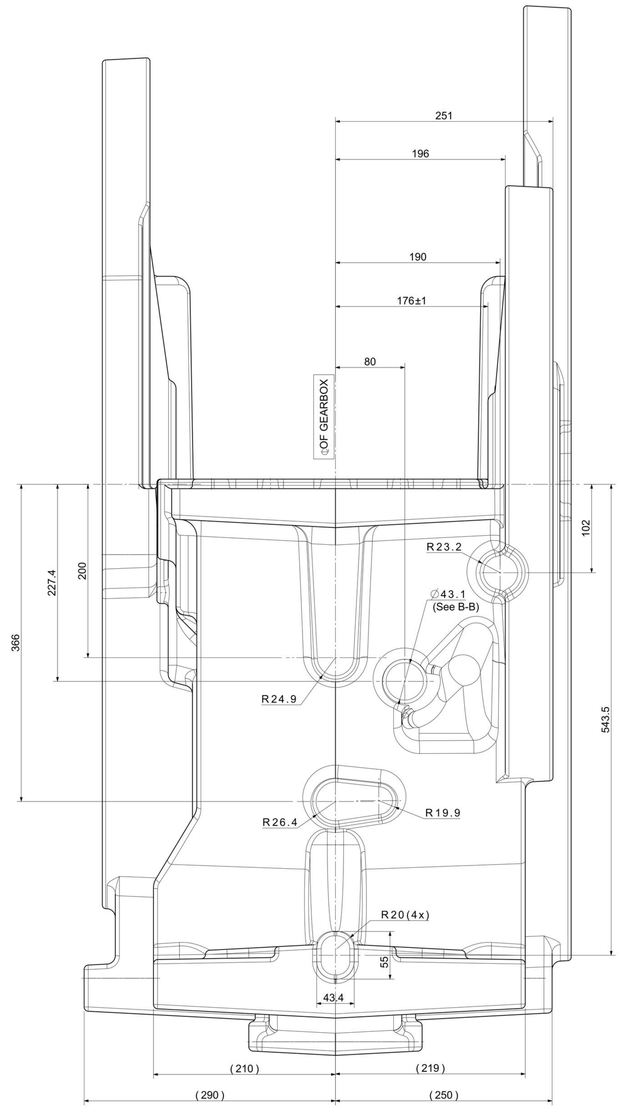

Pinion 2 Side view

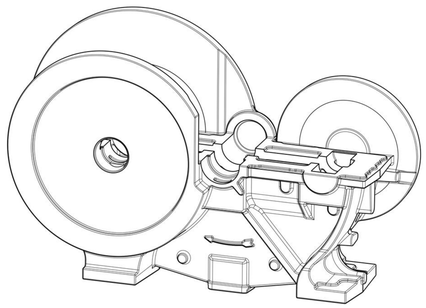

Isometric view Drive Side

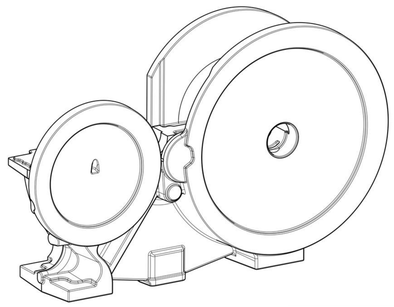

Isometric view Pump Side

Rev.	Position	Modified from	Date	Modified by
1	.	.	6/8/2016 1:04:10 PM	INESUB

All materials supplied are in compliance with the requirements of the List of Prohibited Substances.
This drawing is the property of INESUB and should not be copied or reproduced in any form or given to any other person or company.
Copied, used for manufacturing or communicated to any other person or company.