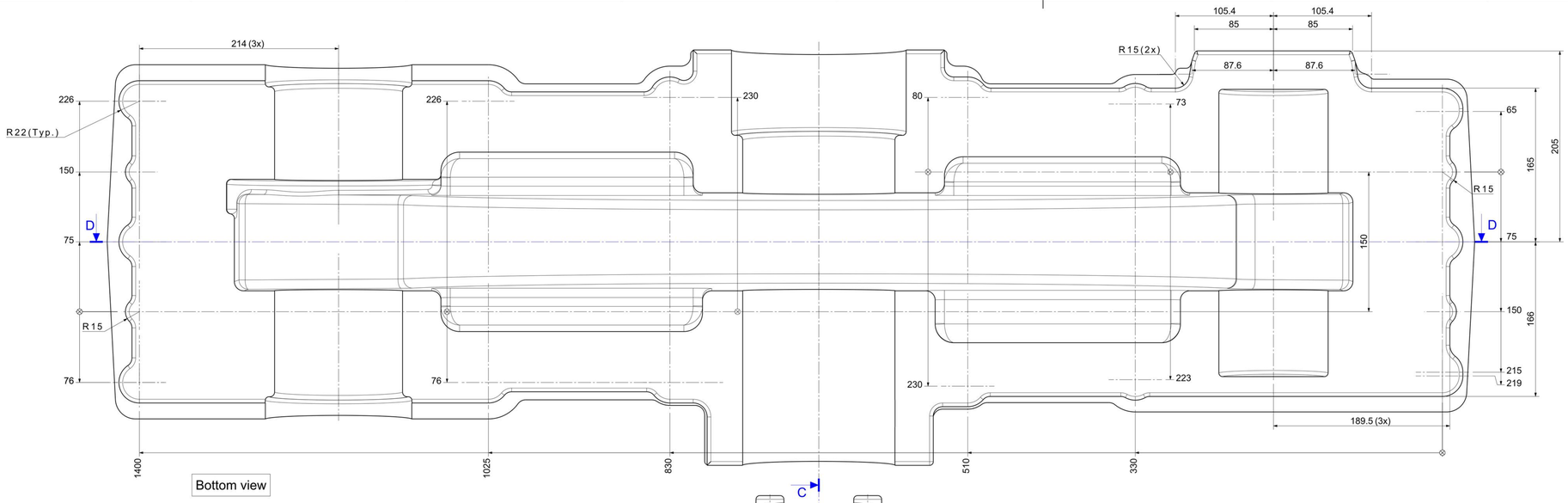

Bottom view

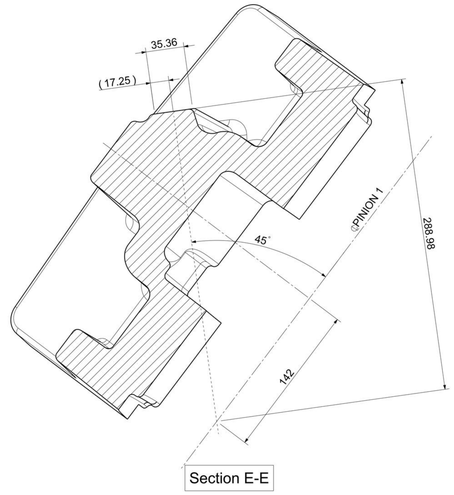

Section E-E

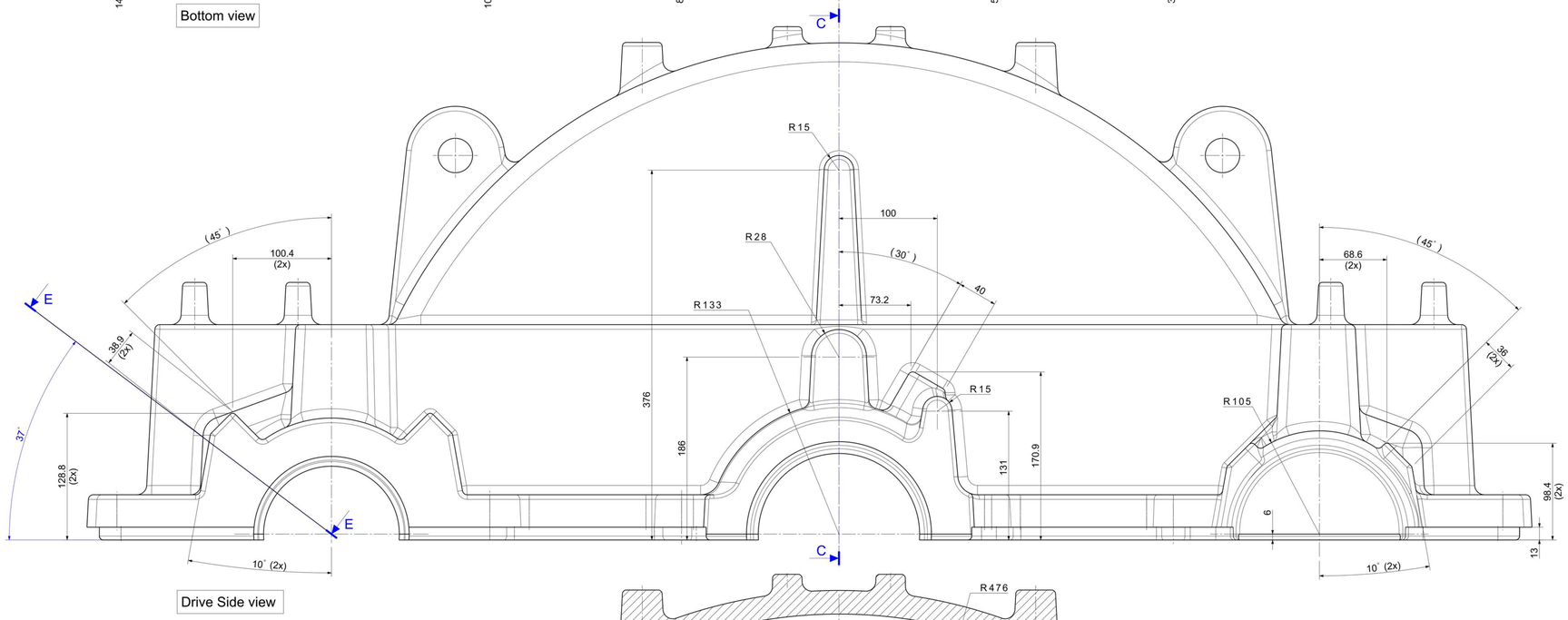

Drive Side view

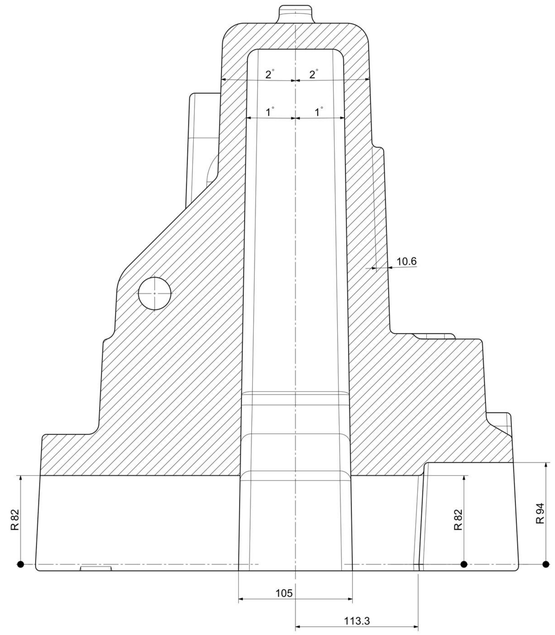

Section C-C

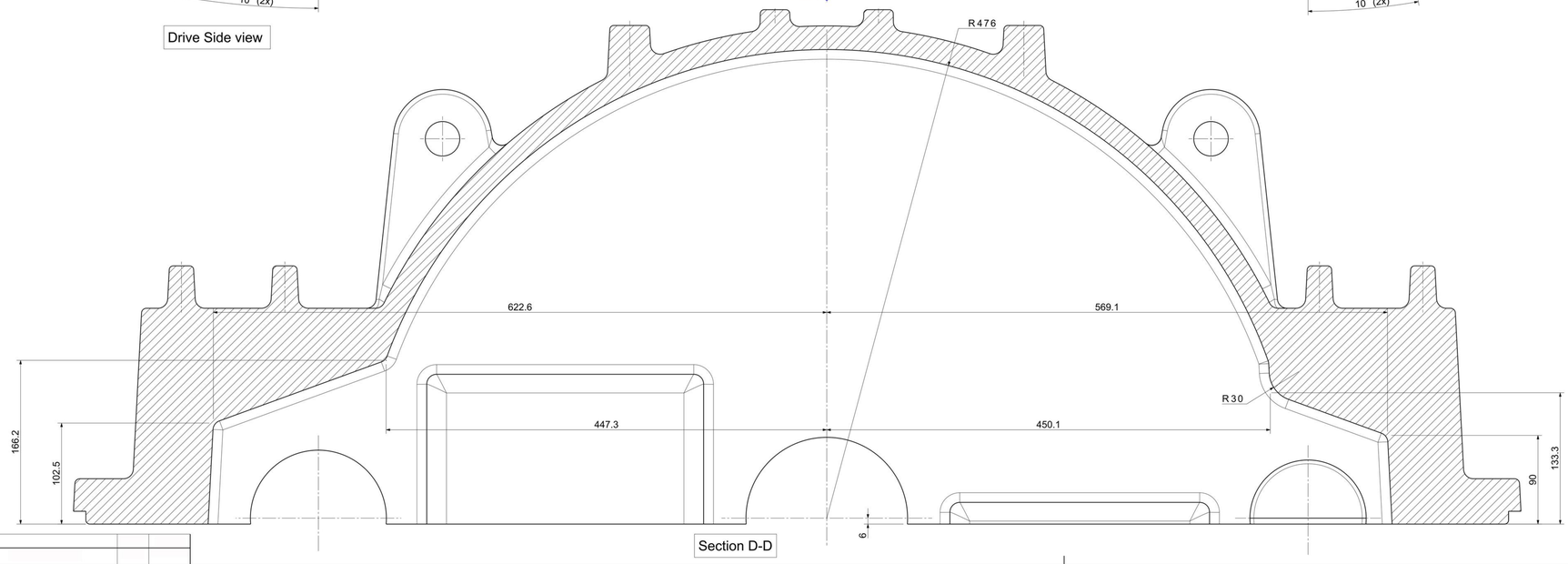

Section D-D