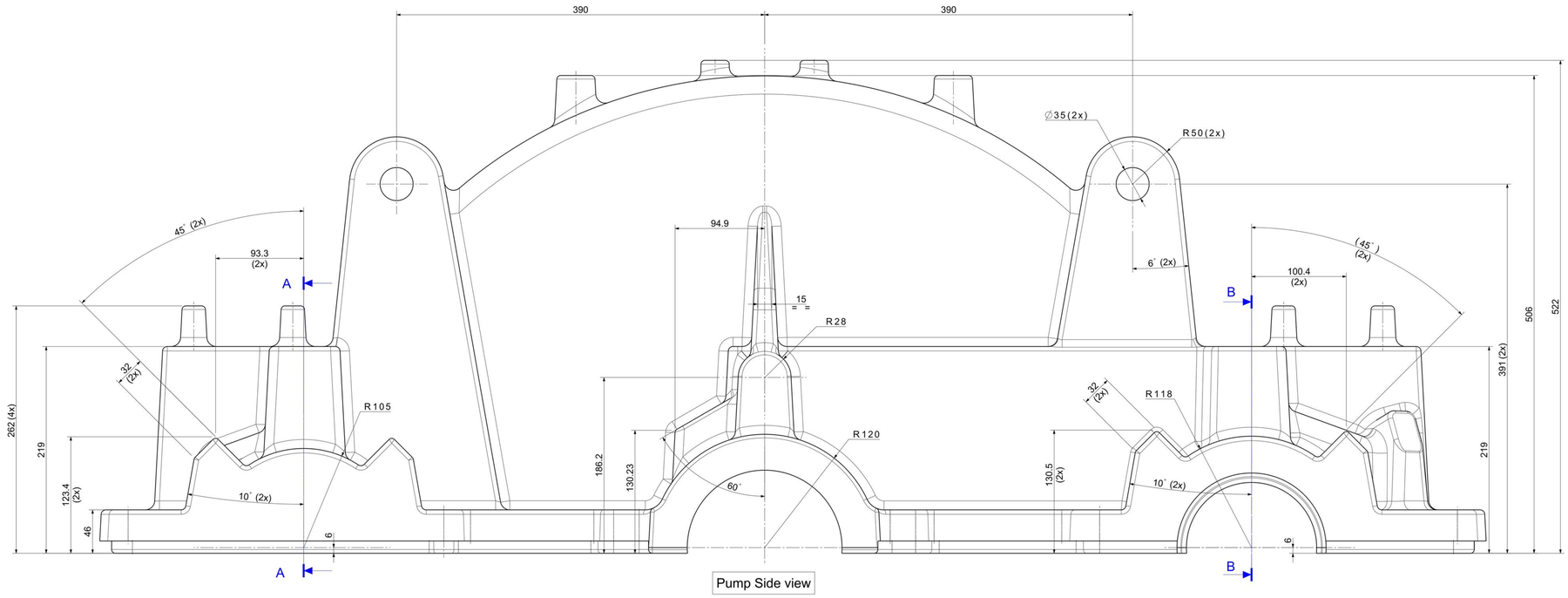

Pump Side view

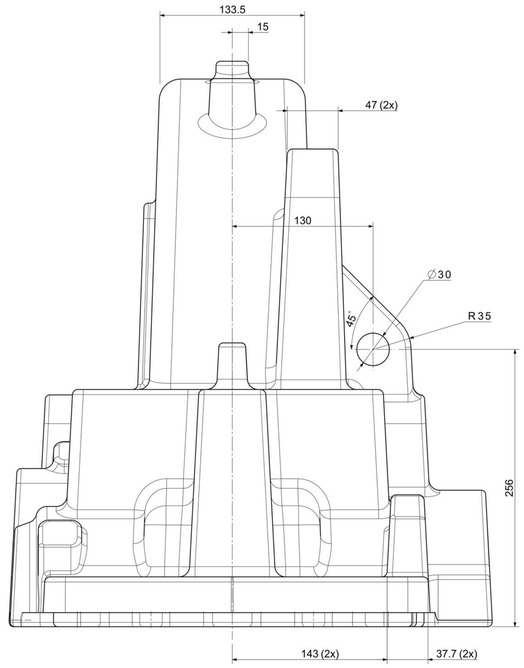

Pinion-2-side view

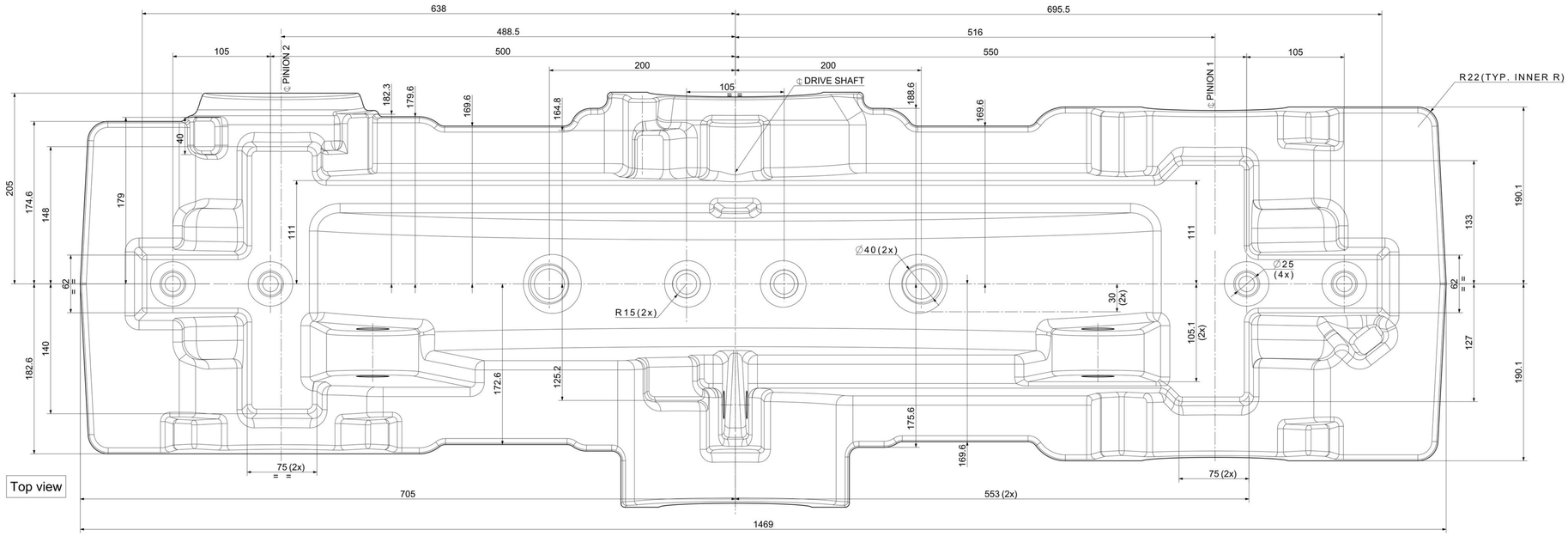

Top view

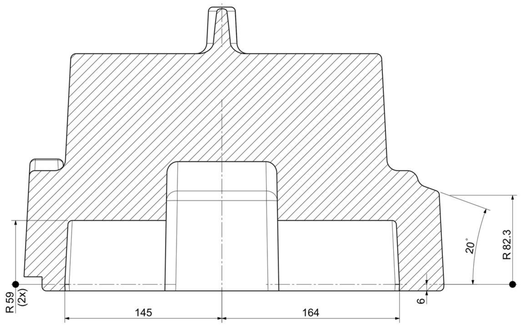

Section A-A

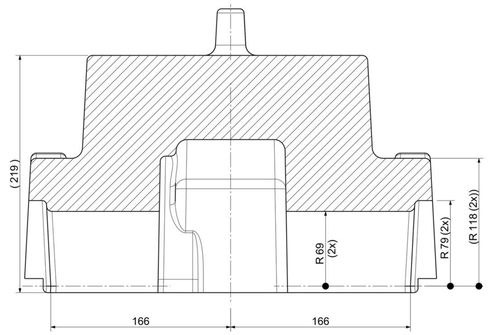

Section B-B

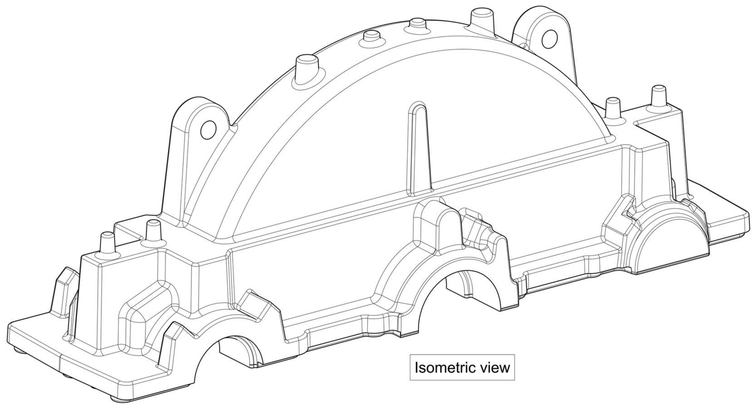

Isometric view

NOTES:

1.CASTING TO BE STRESS RELIEVED AS FOLLOWS:

-HEAT CASTINGS TO 510-530 ºC AT A RATE NOT TO EXCEED 100 ºC/HOUR
-HOLD FOR 1 HOUR
-FURNACE COOL TO 300 ºC AT A RATE MAX. 60ºC/HOUR
-AIR COOL IN STILL AIR
ALTERNATIVE:
-COOL DOWN IN MOULD FOR 24 HOURS UNTIL TEMPERATURE IS LESS THAN 300° C
-AIR COOL IN STILL AIR

2.ALL TIE BARS AND CAST SUPPORTS USED IN CREATING CASTING TO BE REMOVED BY FOUNDRY

技术要求：
1.材质为：EN-GJS-400-18
2.铸造公差等级11级
3.需要做压力测试，压强1.5Mpa
4.加工后不能有外露缺陷

Rev.	Position	Modified from	Date	Modified by
1	.	.	6/9/2016	INERP

All materials supplied are in compliance with the requirements of the List of Prohibited Substances.
The information contained in this document is the property of Inerp Industrial Technology.
Copied, used for manufacturing or communicated to any other person or company.